REVISIONS				
REV	DESCRIPTION	DATE	BY	ECO
A	ADDED MTG. SLOTS AND DIMS. OVERALL LENGTH WAS 9.00 (228.6)	4-7-04	GVC	--

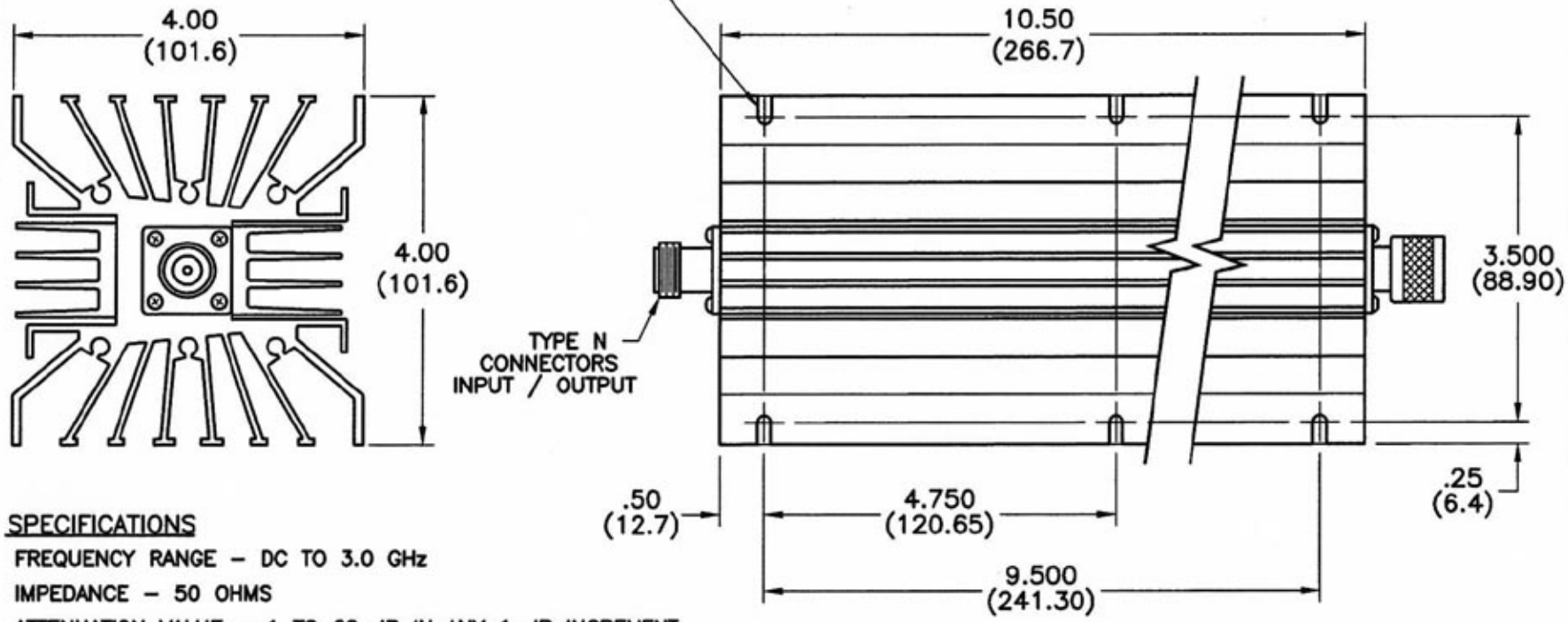

DIMENSIONS: INCHES (MILLIMETERS)

SPECIFICATIONS

FREQUENCY RANGE – DC TO 3.0 GHz

IMPEDANCE – 50 OHMS

ATTENUATION VALUE – 1 TO 60 dB IN ANY 1 dB INCREMENT

ACCURACY – DC TO 2.4 GHz (GREATER OF) ±0.5 dB OR 3%
2.4 TO 3.0 GHz (GREATER OF) ±0.75 dB OR 5%

VSWR (DC TO 1.0 GHz) – 1.15:1 MAX.
(1.0 TO 2.4 GHz) – 1.20:1 MAX.
(2.4 TO 3.0 GHz) – 1.28:1 MAX.

INPUT POWER (AVG.) – 250 WATTS
(PEAK) – 2000 WATTS

OPERATING TEMPERATURE – –55°C TO +125°C

CONNECTOR TYPES – TYPE N, PLUG OR JACK

TOLERANCES	
DEC.XX ± .03	FRAC ±
.XXX ± .005	ANG ± 1°
MATERIAL	
FINISH	

DIMENSIONS ARE IN INCHES UNLESS OTHERWISE SPECIFIED.

THE INFORMATION CONTAINED IN THIS DOCUMENT IS THE PROPERTY OF MICROWAVE DEVICES, INC. AND IS PROPRIETARY. IT IS NOT TO BE COPIED OR USED FOR ANY PURPOSE OTHER THAN AS INSTRUCTED, IN WRITING, BY MICROWAVE DEVICES, INC.

SIGNATURES		DATE
DR	G.V.Cothron	8-6-03
CHK		
APPD		
APPD		

MICROWAVE DEVICES
RF and Microwave Components

MA-5250, 250 WATT DC-3 GHz ATTENUATOR

CAGE	SIZE	DRAWING NO.
60674	A	900410-1

DRAWING SCALE ~~ SHEET 1 OF 1

CONTACT: MICROWAVE DEVICES – 1150 N. GRAHAM RD.
(317) 736-8833 FRANKLIN, IN 46131